DATE	DESCRIPTION	REV.
10.08.13	CHANGE AS PER ECN 13-091	A

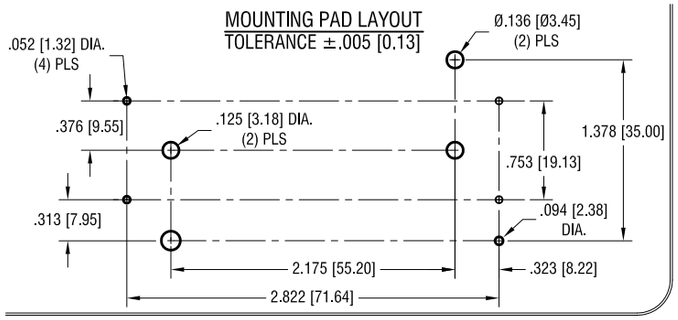

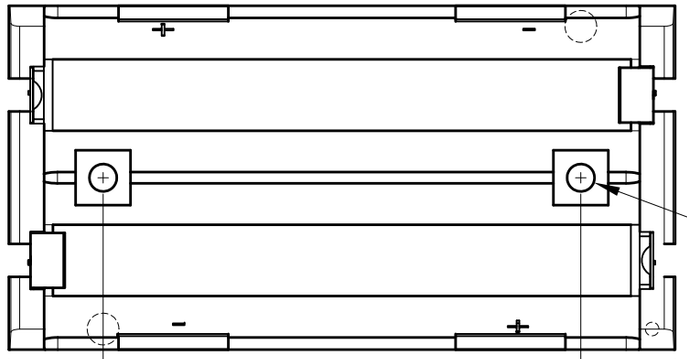

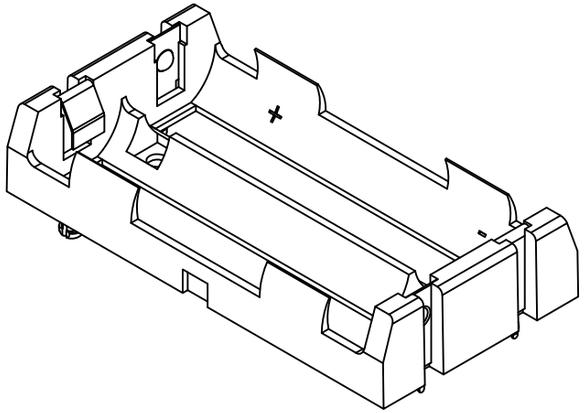

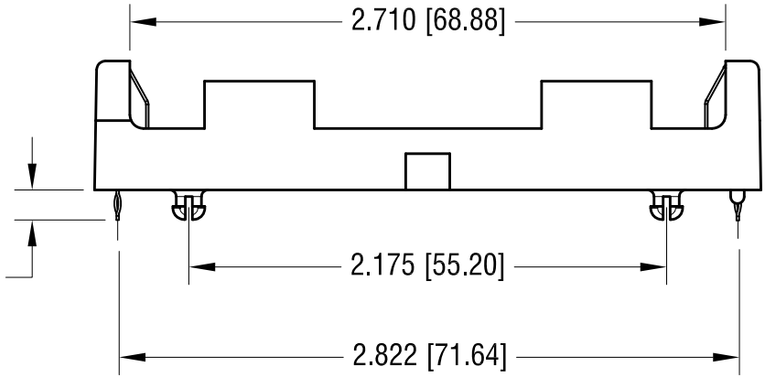

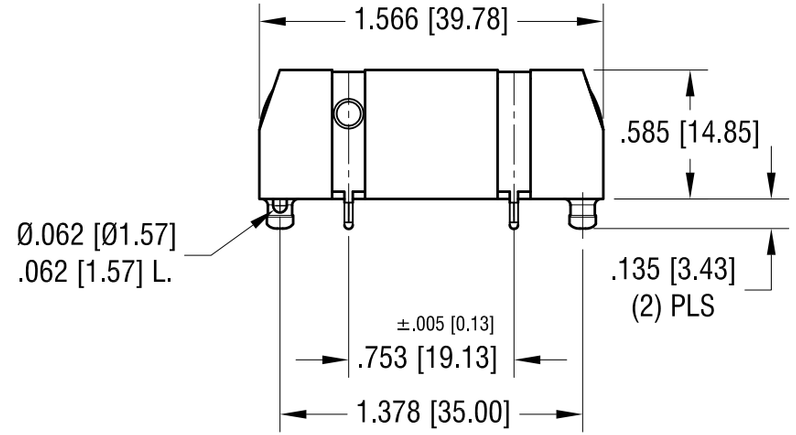

NOTE:
1. BASE:
   MAT'L: HEAT RESISTANCE NYLON
   STANYL 46 OR EQUIVALENT
2. CONTACT:
   MAT'L: .012 [0.30]THK STAINLESS STEEL
   FINISH: TIN NICKEL PLATE

THIS DOCUMENT IS THE PROPERTY OF KEYSTONE ELECTRONICS CORP. AND SHALL NOT BE REPRODUCED, DISTRIBUTED OR USED AS A BASIS FOR MANUFACTURE WITHOUT PRIOR WRITTEN PERMISSION FROM KEYSTONE ELECTRONICS CORP.

KEYSTONE ELECTRONICS CORP.
www.keyelco.com • ASTORIA, N.Y. 11105-2017 • Tel (718) 956-8900

PART NAME	DUAL THM POLARIZED HOLDER		
MATERIAL	AS NOTED		
FINISH	AS NOTED	DRN BY NT	DATE 7.15.13
		APP'D LN	SCALE 1.25X
TOLERANCES INCH [MM] DECIMAL ± .010 [± 0.25] ANGULAR ± 1° UNLESS OTHERWISE SPECIFIED	CODE C	DWG NO. 1049P	